Intelli-Tank Display with 1-wire & CAN Quick Start Guide

INSTALLATION

Mount the unit with the TOP situated up before applying the label to the display.

WIRING

Master – Only **pins 1, 2, 6, 7, 8** are required for a system that doesn't use any remote units. If remote units are part of the system **pin 4** (1-wire communication) or **pins 4 and 5** (CAN communications) must be used.
** *See full manual p/n 114356 for detailed information.*

Remote – Only **pins 1, 2, 4** or **4 and 5** are required for a remote unit. **Pin 4** of the Master and Remote units must be all tied together.
** *See full manual p/n 114356 for detailed information.*

Dim – Apply positive voltage (+VIGN) to **Pin 3** to dim the display.

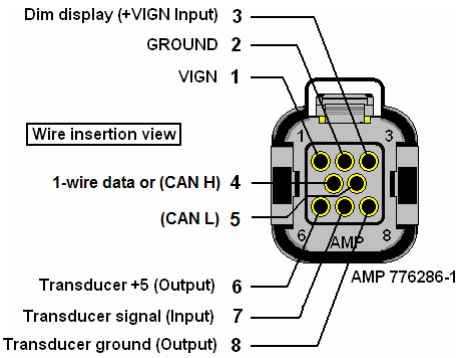

PRESSURE TRANSDUCER MOUNTING

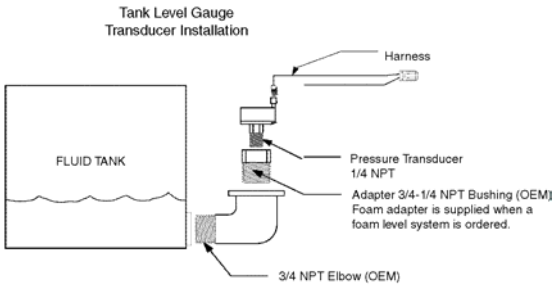

Mount the transducer vertically to insure an accurate reading.

MAGNETIC SWITCH ACTIVATION

A magnet is required to activate the magnetic switches.

Each magnetic switch activation must occur within 2 seconds of the last or the password will be reset.

The top two LEDs will light when the **LEFT** magnetic switch is activated.

The bottom LED will light when the **RIGHT** magnetic switch is activated.

Activate a magnetic switch by using an in-and-out motion starting from approximately two inches away from the bezel.

Do not use a swiping action.

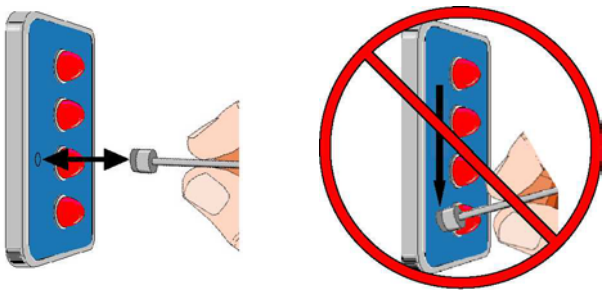

1 POINT CALIBRATION *(FULL)*

1. FILL the tank. Enter the password **RLLR LRRL** to store the calibration. Unit flashes top LED twice, then displays FULL (all LEDs on). Calibration complete.

2 POINT CALIBRATION *(EMPTY, FULL)*

1. Enter the password **RLLR LLRL** to enter 2 point calibration configuration mode. Unit flashes the two center LEDs twice. Unit begins *cascading (drip)* all four LEDs.
2. Ensure the tank is EMPTY. Activate the **RIGHT** switch to store this point. Unit flashes top LED, then lights all four LEDs.
3. FILL the tank. Activate the **RIGHT** switch. Unit flashes top LED, lights the two center LEDs, then displays FULL (all LEDs on). Calibration complete.

Make certain that the FULL point used for tank calibration is approximately 1 inch [2.54 cm] to 2 inches [5.08 cm] from the physical top of the tank.

Do not calibrate the FULL point with the water level up into the fill tower.

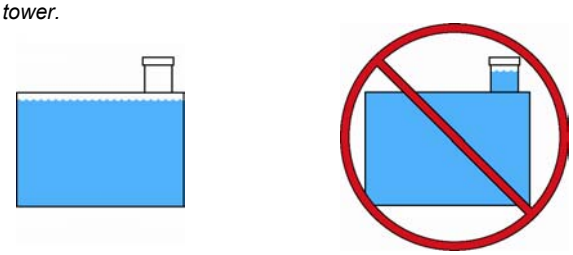

OPERATION

During power up the display will individually cycle on each LED starting with the bottom LED. The unit will then show current tank level information.

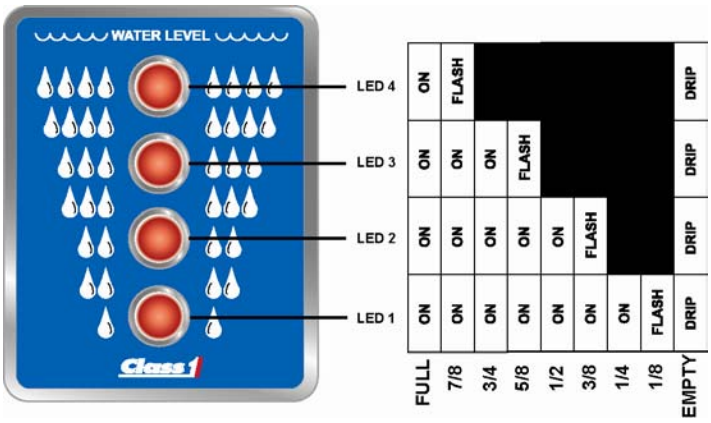

DRIP = cascades from top (LED 4) to bottom (LED 1), pauses, and repeats.

For detailed operation and troubleshooting consult the full manual (p/n 114356) available from the Class 1 web site **www.Class1.com**