INSTALLATION INSTRUCTIONS:

1 REMOVE PLASTIC COVERING ON GAUGE GASKET ADHESIVE.

2 INSERT GAUGE (ITEM 1) INTO SHEET METAL PANEL.

3 IF NECESSARY, APPLY **ONLY LOCTITE 425** (AS SHOWN IN DETAIL A) ACCORDING TO THE CHART BELOW:

GAUGE SIZE	LOCTITE 425 DROPS
2.5"	2
3.5"	3
4.5"	3

4 ATTACH GAUGE NUT (ITEM 2) AND HAND TIGHTEN (USE NON-MARRING TOOLS IF NECESSARY).

5 ATTACH APPROPRIATE FITTING TO GAUGE INTERNAL STEM, AS REQUIRED (SEE DETAIL B).

TIGHTEN FITTING BY GRIPPING FLAT SURFACES ON GAUGE INTERNAL STEM.

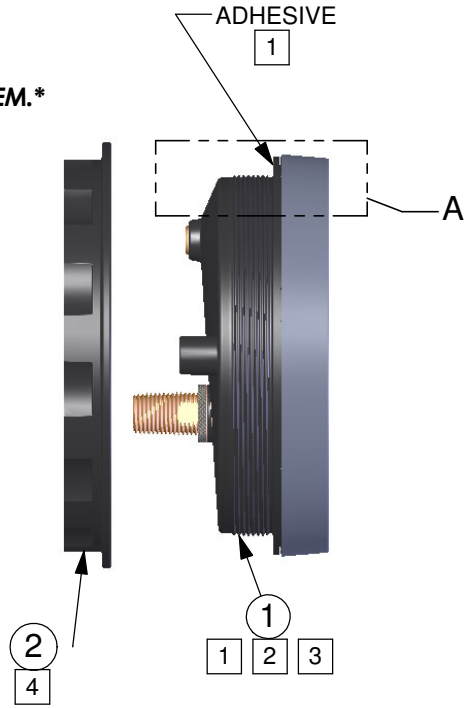

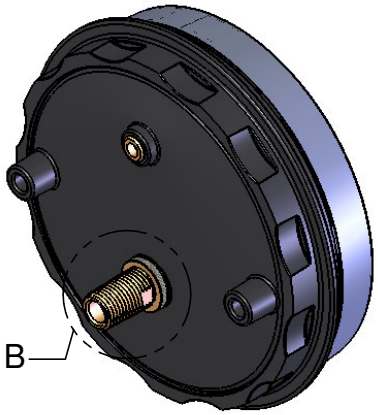

DETAIL B
SCALE 1 : 1.5

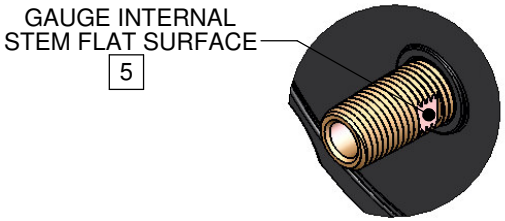

! USE FLAT SURFACES WHEN TIGHTENING OR LOOSENING GAUGE FITTINGS

DETAIL A
SCALE 2 : 2.5

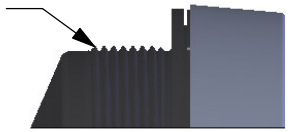

ITEM	PART	DESCRIPTION	QTY
2	NUT	2.5", 3.5", or 4.5" NUT	1
1	GAUGE	2.5", 3.5", or 4.5" GAUGE	1

DRAWING NOTES:
UNLESS OTHERWISE SPECIFIED
1. ALL dimensions are in inches
2. Do not scale drawing
3. Decimal Tolerance
X.XX = +/-.01
X.XXX = +/-.005
X.XXXX = +/-.0005
4. Angle Tolerance .5 degrees.

THIRD ANGLE PROJECTION

This document and the information hereon are the exclusive property of Class 1 and is loaned to you subject to return on demand, unless otherwise agreed to in writing by Class 1.

Class1 A unit of IDEX IDEX CORPORATION
607 N.W. 27th Ave.
Ocala, Florida 34475
Phone: 352-629-5020
FAX: 352-629-2902

STANDARD GAUGE
INSTALLATION DRAWING

CAGE IDENT. NO.	COMPLETED	DRAWN	CHECKED	APPROVED	PROJECT
06CG4	12/11/06	AJG	--	--	--

SIZE	DRAWING NUMBER	REV
A	115912	-
SCALE 1:2.5		SHEET 1 OF 1

REV	DATE	BY	ECR	DESCRIPTION
-	12/11/06	AJG	N/A	ORIGINAL RELEASE